INTERNSHIP REPORT

A report submitted in partial fulfillment of the requirements for the Award of Degree of

BACHELOR OF ENGINEERING

In

ELECTRICAL AND ELECTRONICS ENGINEERING

By

SHIYAM SUNDAR K S (23EE055)

MAHALINGAM N (23EE027)

KARTHICKRAJA C(23EE020)

TIME PERIOD(08-01-2025 TO 24-01-2025)

Under supervision of Mr. Selvakumar.S POWER PROJECTS INDIA

KPR INSTITUTE OF ENGINEERING AND TECHNOLOGY
(Autonomous, NAAC 'A') Avinashi Road, Arasur

COIMBATORE- 641 407

JANUARY 2024

ACKNOWLEDGEMENT

- We extend our heartfelt thanks to POWERPROJECTS, KODUVAI, and our supervisor for affording me the chance to hone my skills through industry training.

- The collective expertise and generosity of my colleagues at **POWERPROJECTS** significantly enhanced my learning experience, fostering a spirit of collaboration and mutual growth.

- We would like to thank **Dr. R. Kiruba Shankar,** professor & Director of KPRIET for his support and advice to get an internship and complete the same in the above-said organization

- The team's expertise and willingness to share their insights significantly contributed.

- We extend our deepest gratitude to our Chairman **Dr. K.P. Ramasamy**, CEO **Dr. A. M. Natarajan**, and Principal **Dr. D. Saravanan** for providing the necessary resources to facilitate my internship.

- We appreciate the backing of my Head of Department, **Dr. K. Mohana Sundaram**, who granted me permission to pursue this internship opportunity.

- We also thankful for the guidance and encouragement received from **Dr.A.MohamedIbrahim**, Assistant Professor at KPRIET, which enabled me to secure and complete this internship at POWERPROJECTS, KODUVAI.

- Furthermore, We acknowledge the invaluable support of my department's IIPC coordinator, **Dr. P. Pandiyan**, as well as our faculty members and friends, who collectively contributed to the successful completion of our internship

ABSTRACT

I was privileged to undergo industrial training at **POWER PROJECTS**, which proved to be a pivotal experience during my undergraduate studies. This training enabled me to bridge the gap between theoretical knowledge and practical application, providing me with hands-on experience in industrial processes. Through this training, I acquired valuable skills, expanded my industrial knowledge, and stayed abreast of cutting-edge technologies.

During my training, I gained insight into the fabrication of e-scooter frames and the intricacies of assembly. I witnessed the meticulous process of assembling components, including motors, control systems, and batteries. The emphasis on precision engineering was evident, with even minute measurements playing a critical role in the assembly process.

The team addressed our queries regarding component fixing and assembly, while the chief engineer offered expert guidance on e-vehicle manufacturing and technical terminology. His oversight of design and testing ensured a seamless assembly process. I was impressed by the attention to detail and the commitment to quality that permeated every aspect of the manufacturing process.

This training experience not only enhanced my technical skills but also instilled in me a deeper appreciation for the complexities of industrial manufacturing. I gained valuable insights into the importance of teamwork, communication, and problem-solving in an industrial setting.

Furthermore, I was exposed to the latest technologies and industry trends, which helped me stay updated on the rapidly evolving landscape of electrical and electronic engineering. The training program at **POWER PROJECTS** was instrumental in shaping my undergraduate studies and preparing me for a successful career in the industry.

This report encapsulates the knowledge and expertise I acquired during my industrial training at **POWER PROJECTS**.

TABLE OF CONTENTS

Chapter No	Title
1	Internship Certificate
2	Abstract
3	About the Company
4	Plan of the in-plant training/ industry training/ internship program
5	Training Task
6	Conclusion
7	Attendance Sheet Industry Student Daily Diary Industry Supervisor Evaluation Sheet

CHAPTER 1
ABOUT THE COMPANY

Power Projects India is a preeminent company specializing in power system engineering, offering a diverse array of services tailored to meet the complex electrical engineering needs of various industries. Established in 2006, the company has cultivated a strong reputation for delivering innovative, cost-effective solutions that prioritize quality, reliability, and efficiency. Power Projects India provides comprehensive services, including power system studies, consulting services, detailed engineering, design engineering, and technical support, catering to a broad spectrum of industries such as power plants, process and manufacturing industries, commercial buildings, and renewable energy sectors. The company's expertise encompasses power system analysis, design, and optimization, ensuring seamless integration with existing infrastructure. Furthermore, Power Projects India conducts training programs for students and professionals, focusing on electrical engineering and power system management, thereby fostering a culture of knowledge sharing and skill development. With excellent reviews from clients and employees, Power Projects India is a trusted name in the power system engineering industry, recognized for its unwavering commitment to quality, innovation, and customer satisfaction..

EMAIL ADDRESS:
info@powerprojectsindia.com

PHONE:
+919042342912

HEADQUARTERS:
M/s Powerprojects, 4, 499/5, Vinobha Nagar, Mobile:, Koduvai, Tamil Nadu 638660

WEBSITE:
https://powerprojectsindia.c

CHAPTER 2

PLAN OF OUR INTERNSHIP

First Week: Load Flow Analysis

During my first week at Power Projects India, I gained a comprehensive understanding of Load Flow Analysis. The training covered essential topics such as introduction to load flow, objectives, and standards. I also explored types of buses, simulation tools like ETAP, Ferranti effect, transformer tap changers, reactive power control, power factor improvement, modeling generators, transformer paralleling, types of loads, and contingency analysis. This foundational knowledge enabled me to grasp the intricacies of power system behavior under various load conditions. Through hands-on exercises and case studies, I developed skills in analyzing and solving load flow-related problems, setting the stage for further exploration of power system analysis techniques.

Second Week: Short Circuit Analysis

In my second week at Power Projects India, I delved into Short Circuit Analysis, acquiring expertise in identifying and mitigating potential faults in power systems. The training encompassed topics such as introduction to short circuits, effects, causes, and types of faults. I also studied objectives, standards, C factors, maximum and minimum short circuit currents, grounding and earthing, circuit breakers, standards, and methods of limiting fault currents.

By applying theoretical concepts to practical scenarios, I developed a deeper understanding of short circuit analysis and its significance in ensuring power system reliability and safety. This knowledge will enable me to design and develop more robust and fault-tolerant power systems.

WEEKLY OVERVIEW INTERNSHIP

LOAD FLOW ANALYSIS:

	DATE	DAY	NAME OF THE TOPIC/MODULE COMPLETED
1st WEEK	08.01.2025	Wednesday	Orientation and Introduction
	09.01.2025	Thursday	Standards and Types of Bus
	10.01.2025	Friday	Simulation Tool (ETAP) and Ferranti effect
	11.01.2025	Saturday	Transformer tap changer and Reactive power control
	13.01.2025	Monday	Power factor improvement
	14.01.2025	Tuesday	Transformer paralleling and Types of load
	15.01.2025	Wednesday	Contingency Analysis

SHORT CIRCUIT ANALYSIS:

	DATE	DAY	NAME OF THE TOPIC/MODULE COMPLETED
2nd WEEK	16.01.2025	Thursday	Introduction and Types of fault
	17.01.2024	Friday	Causes and Effects of fault
	18.01.2024	Saturday	Objectives and Modelling
	21.02.2024	Tuesday	Standards and Limitation
	22.02.2024	Wednesday	C Factor and Max Min SC Current
	23.02.2024	Thursday	Grounding and Earthing
	24.02.2024	Friday	Methods of limiting fault current

CHAPTER 3

TRAINING TASK

Day 1;

Introduction and orientation

- Immersive Onboarding: Introduction to POWER PROJECTS' guiding principles, mission statement, and vision for innovation in power systems, emphasizing the company's commitment to excellence and sustainability.
- Organizational Overview: Comprehensive insight into POWER PROJECTS' corporate structure, highlighting key departments, their responsibilities, and how they collaborate to drive business objectives.
- -Safety First: In-depth briefing on workplace safety protocols, emergency response plans, and the shared responsibility of maintaining a secure and healthy work environment that fosters well-being and productivity.
- Strategic Alignment: Engagement with senior leadership and department heads to grasp POWER PROJECTS' strategic roadmap, goals, and industry outlook, ensuring interns understand the company's vision and how they contribute to its success.
- Open Communication: Encouragement for interns to engage in open dialogue, share their expectations, and align their personal development goals with POWER PROJECTS' overarching objectives, promoting a culture of transparency, collaboration, and mutual growth.

Day 2;

Standards

- IEEE 14 Bus Standard: We applied this standard to test the accuracy of our load flow
- Analyzing algorithms.
- IEEE 30 Bus Standard: This standard was used to validate our analysis for medium-sized power systems
- IEEE 57 Bus Standard: We utilized this standard to test our analysis for large- sized power systems.

Types of Bus

- Slack Bus: We designated a slack bus as the reference bus, providing the phase angle reference for the system
- PV Bus: Our analysis included PV buses, where voltage magnitude and active power were specified, typically representing generators.
- PQ Bus: We worked with PQ buses, where active and reactive power were specified, typically representing loads.
- Vδ Bus: Our study also covered Vδ buses, where voltage magnitude and angle were specified, typically representing voltage-controlled buses

Day 3;

- During our analysis, we utilized load flow studies to examine the existing power system, plan for future expansions, and design new power systems.

- We ensured that our proposed power network operations would not overload any equipment and that all bus voltages remained within acceptable limits.

- Through load flow calculations, we determined the steady-state operating characteristics of the power system under specific load and generator conditions.

- With this information, we easily calculated the real and reactive power flow in all branches, as well as the associated power losses.

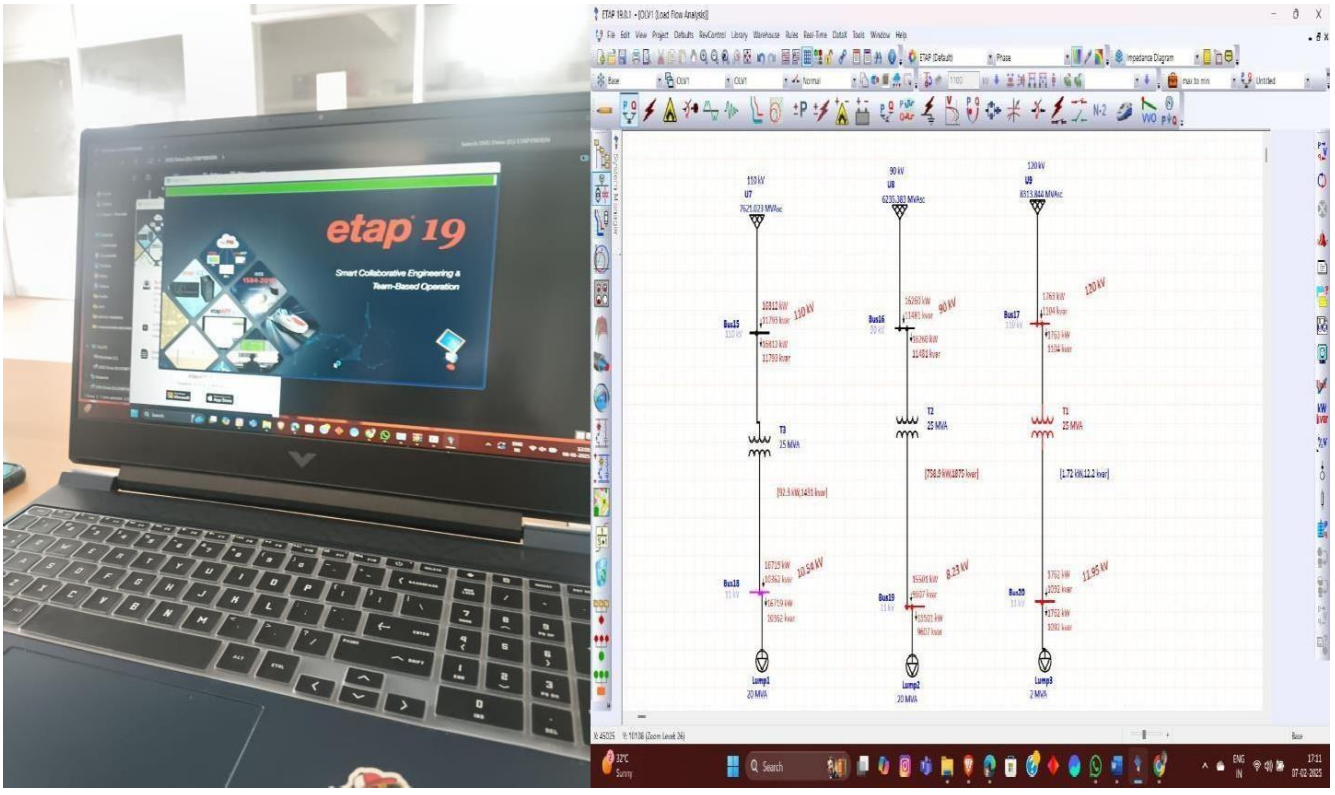

Day 4;

- Transformer Tap Changers: We have studied the operational mechanics of transformer tap changers to adjust output secondary voltage.

- Types of Tap Changers: We have examined the two primary types of tap changers: fixed tap changers and on-load tap changers (OLTCs).

- On-Load Tap Changers (OLTCs): We have understood the role of OLTCs in regulating power transformers to maintain voltage within tolerance limits.

- Composition of OLTC Transformers: We have learned about the composition of on-load tap changing transformers (OLTC) and their application.

- Importance of Tap Changers: We have recognized the importance of tap changers in maintaining optimal voltage levels for reliable power transmission and distribution.

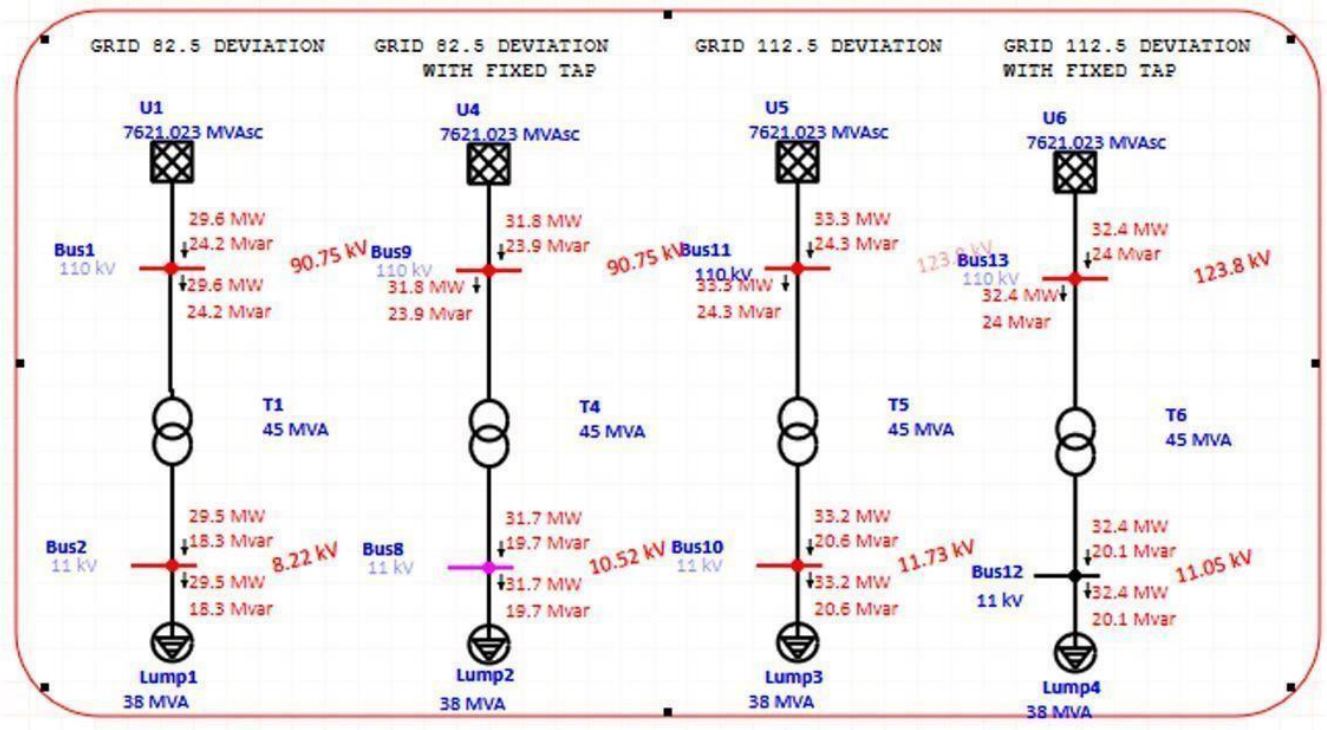

Day 5;

- Power Factor Improvement: We have implemented power factor improvement using shunt capacitors to enhance the power factor in the network.
- Voltage Stability: We have improved voltage stability by installing shunt capacitor banks, ensuring a more stable voltage supply.
- Network Losses Reduction: We have reduced network losses by utilizing shunt capacitors, resulting in more efficient power transmission.
- Increased Power Transmission Capability: We have increased power transmission capability by improving the power factor, enabling more efficient use of existing infrastructure.
- Better Control of Power Flow: We have achieved better control of power flow by implementing shunt capacitor banks, allowing for more precise management of power distribution.

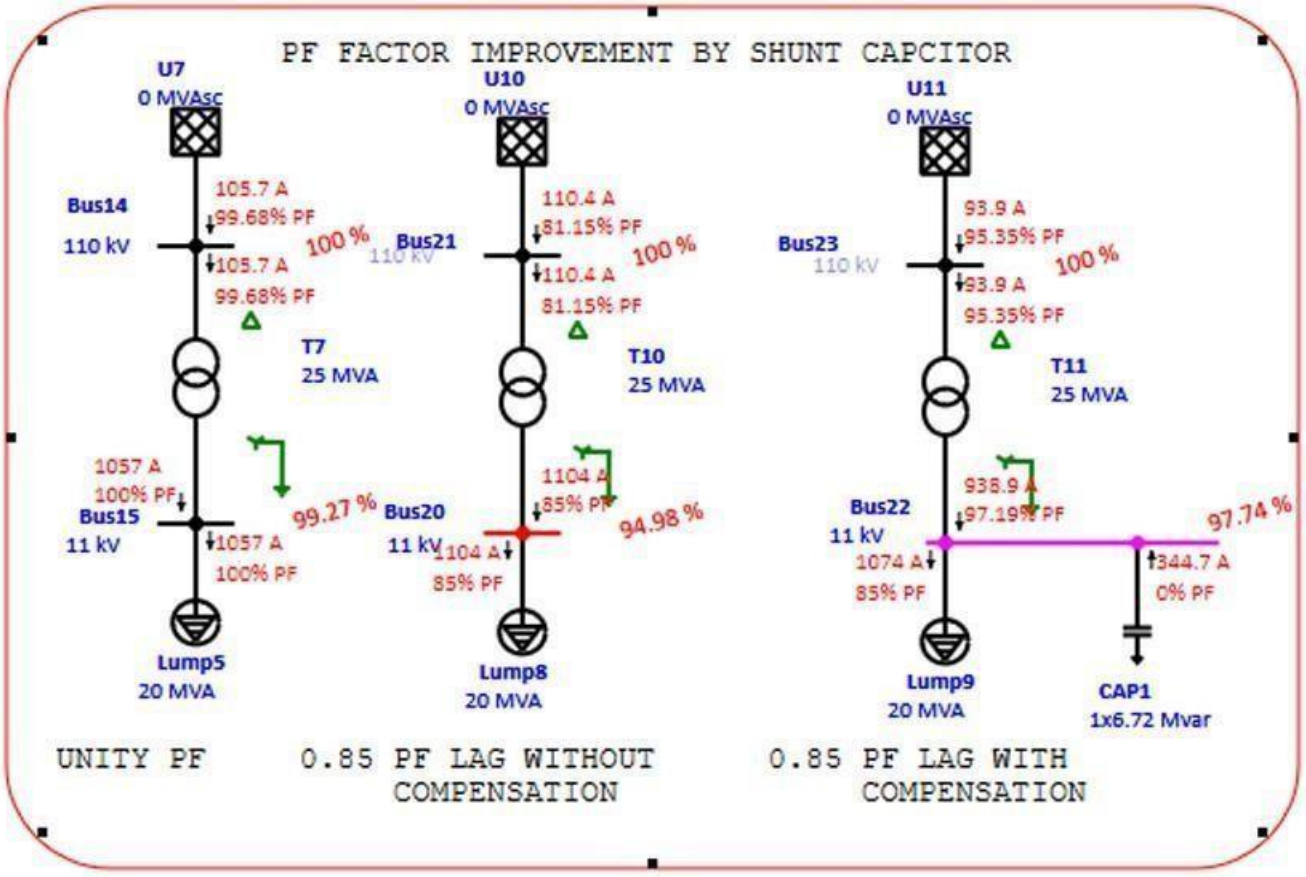

Day 6;

- Increased Load Handling: We have implemented transformer paralleling to handle increased load, connecting additional transformers to existing ones to supply the excess demand.

- Overcoming Transformer Availability Constraints: We have connected multiple small transformers in parallel to meet load requirements when a single large transformer was not available.

- Enhanced Reliability: We have achieved increased reliability by running multiple transformers in parallel, ensuring continuous load supply even in the event of a fault in one transformer.

- Convenient Maintenance: We have taken advantage of transformer paralleling to easily remove faulty transformers for maintenance while other parallel units continue to serve the load.

- Easier Transportation and Installation: We have utilized smaller transformers that are easier to transport and install, particularly for remote locations, reducing logistical challenges and costs.

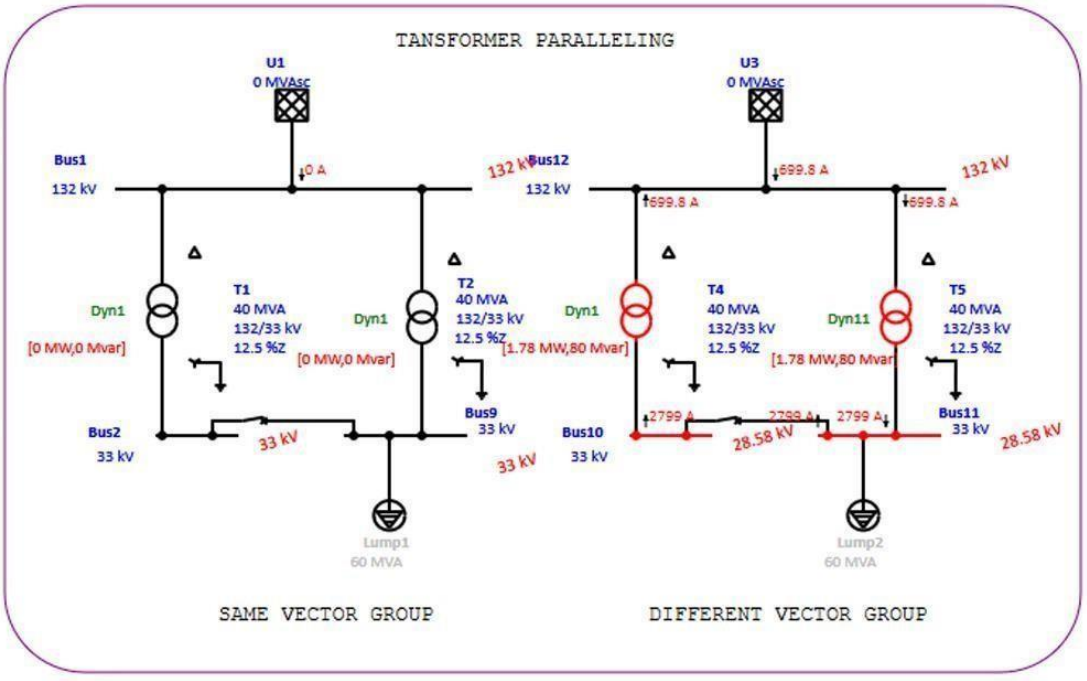

Day 7;

- We have performed contingency analysis to ensure power system security and identify potential issues that may arise from the loss of one or more system elements.

- We have utilized contingency analysis to analyze the power system, detect potential overloads, and mitigate problems that may occur due to unforeseen events or system failures.

- Through contingency analysis, we have simulated the removal of individual elements from the power system to evaluate the effects on system operation and identify potential weaknesses.

- We have employed contingency analysis as a crucial tool to test the power system's strengths and weaknesses, ensuring compliance with operating policies and guidelines.

- Our contingency analysis has been an essential part of power system planning and operation, allowing us to identify and address potential issues proactively, even in the absence of computational tools, relying on manual calculations when necessary.

CONTIGENCY ANALYSIS

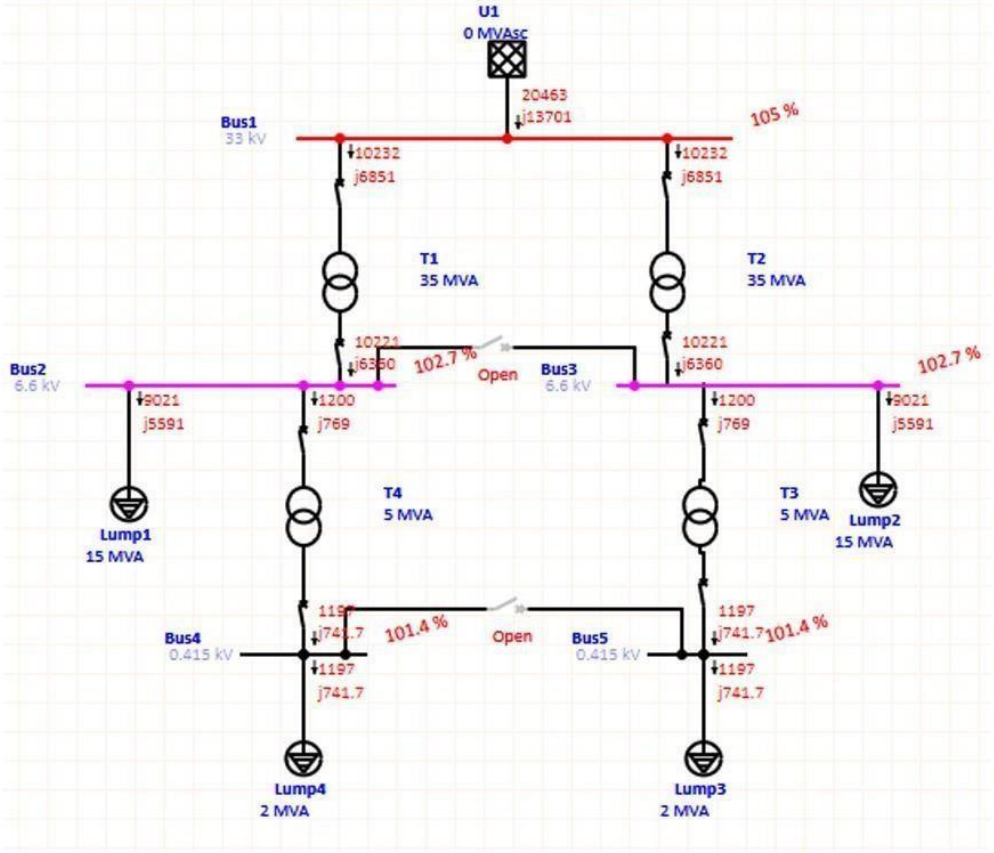

Day 8;

- We have learned about the introduction of short circuit analysis, understanding its importance in power system studies.

- We have studied the different types of faults, including single line-to-ground faults, line-to-line faults, double line-to-ground faults, and three-phase faults.

- We have gained knowledge on how to analyze and calculate short circuit currents for various types of faults, enabling us to design and develop safe and reliable power systems.

- Through our studies, we have understood the significance of short circuit analysis in identifying potential weaknesses and vulnerabilities in power systems, allowing for proactive measures to prevent or mitigate faults.

- We have applied our knowledge of short circuit analysis to real-world scenarios, analyzing and solving problems related to fault currents, circuit breakers, and power system protection.

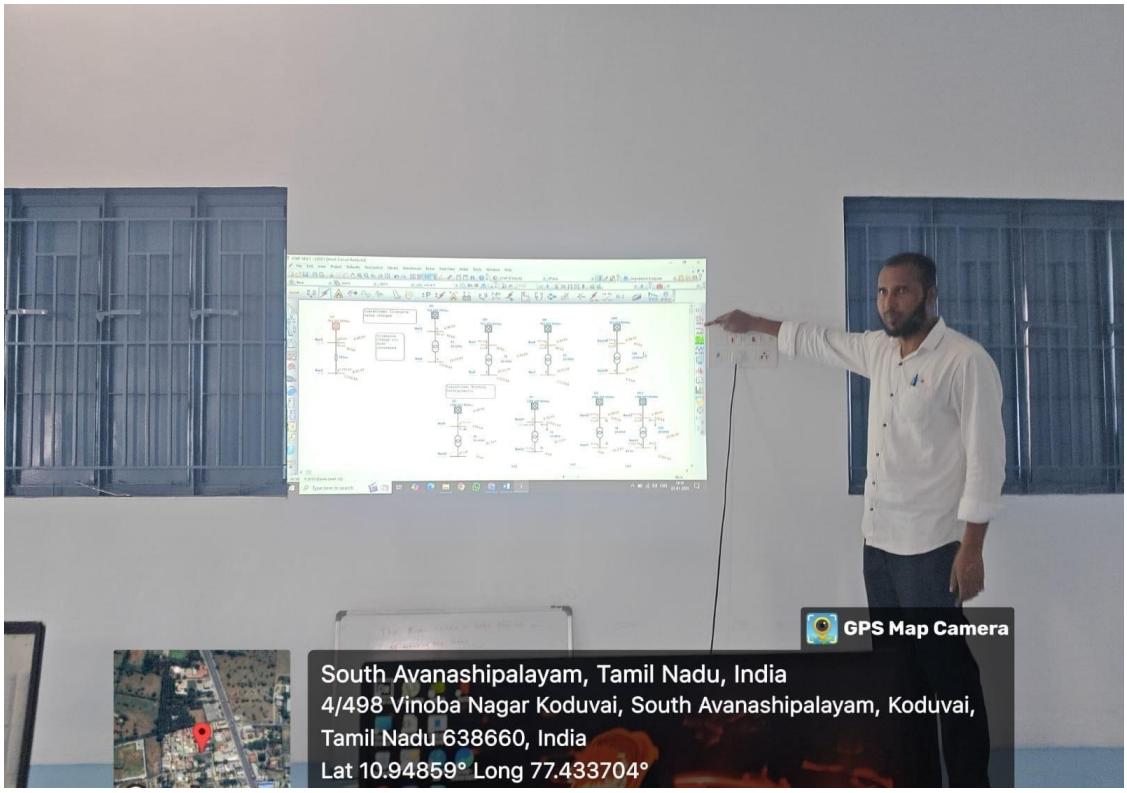

Day 9;

- We have identified and analyzed the various causes of faults in power systems, including insulation failure, overloading, short circuits, and weather-related events.

- We have examined the effects of faults on power systems, including power outages, equipment damage, and potential safety hazards.

- We have studied the impact of faults on power system operation, including voltage fluctuations, frequency deviations, and power quality issues.

- Through our analysis, we have understood the importance of prompt fault detection and isolation to minimize the effects of faults and prevent cascading failures.

- We have applied our knowledge of fault causes and effects to develop strategies for fault prevention, detection, and mitigation, ensuring reliable and efficient power system operation.

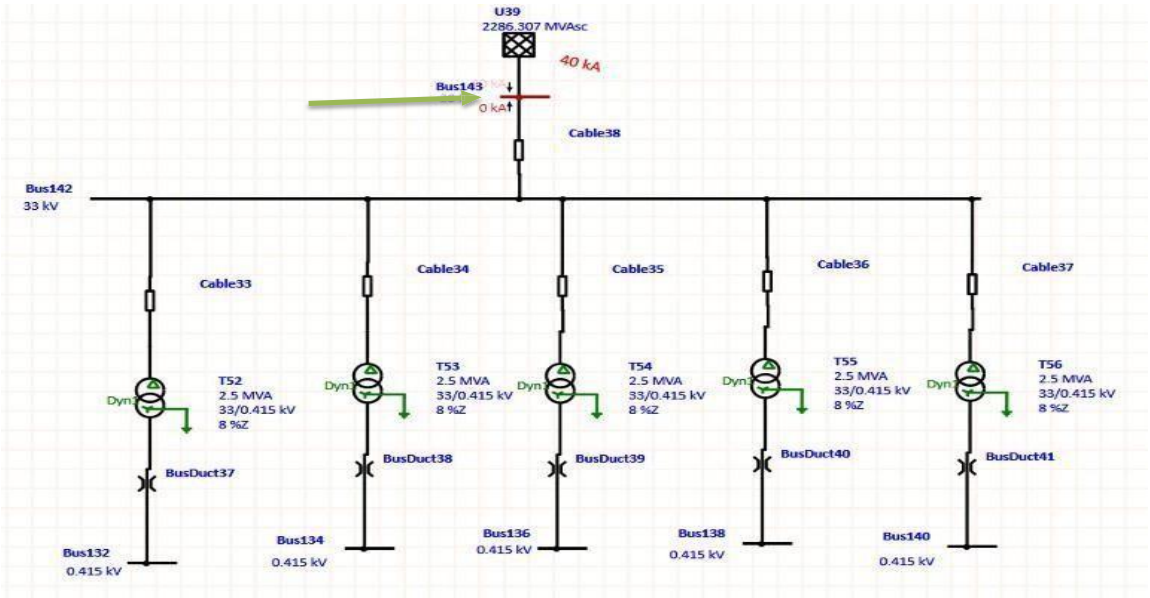

Day 10;

- We have defined the objectives of short circuit analysis, including determining the magnitude and duration of short circuit currents, identifying potential fault locations, and designing protective devices.

- We have developed and applied mathematical models to represent power system components, including generators, motors, transformers, and transmission lines, for accurate short circuit analysis.

- We have utilized various modeling techniques, such as the per-unit system, to simplify and standardize short circuit analysis calculations.

- Through our modeling efforts, we have accurately represented the behavior of power systems under fault conditions, enabling the design of effective protection schemes and ensuring reliable system operation.

- We have applied our knowledge of short circuit analysis modeling to real-world power systems, analyzing and solving complex fault scenarios and developing practical solutions.

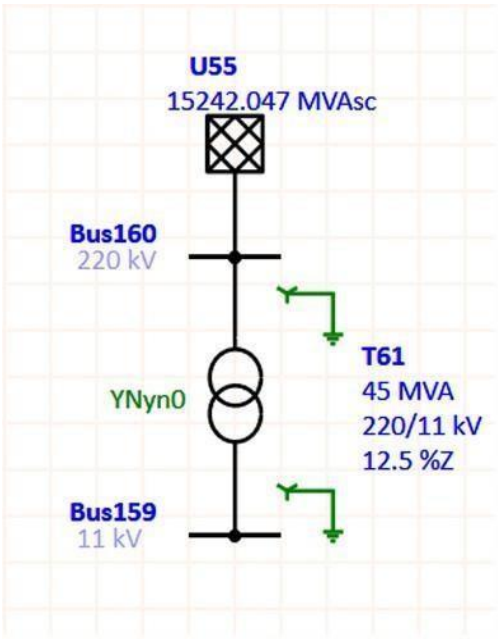

Day 11;

- Adherence to IEEE Std 141-1993: We have performed short circuit analysis in accordance with IEEE Std 141-1993, ensuring accurate and reliable results.
- Compliance with IEEE Std 399-1997: We have complied with IEEE Std 399- 1997 for power system analysis, guaranteeing international standards and best practices.
- Consideration of System Topology: We have taken into account the system topology, including network configuration and component characteristics, to ensure accurate short circuit analysis.
- Inclusion of System Components: We have included all relevant system components, such as generators, motors, and transformers, in our short circuit analysis.
- Assessment of Fault Types: We have assessed various fault types, including three-phase, single-line-to-ground, and line-to-line faults, in accordance with IEEE Std 1159-2009.
- Evaluation of Fault Locations: We have evaluated the impact of fault locations on short circuit currents and system behavior.
- Limitations of Simplified Models: We have recognized the limitations of simplified models and taken steps to ensure accurate representation of system behavior.
- Consideration of Dynamic Effects: We have considered dynamic effects, such as transient stability and oscillations, in our short circuit analysis.
- Incorporation of Protective Devices:We have incorporated protective devices, such as circuit breakers and relays, into our short circuit analysis to ensure accurate representation of system behavior.
- Validation of Results: We have validated our short circuit analysis results through comparison with actual system performance and testing, in accordance with IEEE Std 1243-1998.

Day 12;

- Determination of C Factor: We have determined the C factor for our power system, considering the ratio of minimum three-phase fault current to the maximum three-phase fault current.

- Calculation of Maximum Short Circuit Current: We have calculated the maximum short circuit current using the formula: Isc_max = (E / (R + jX)), where E is the system voltage, R is the resistance, and X is the reactance.

- Calculation of Minimum Short Circuit Current: We have calculated the minimum short circuit current using the formula: Isc_min = (E / (R + jX)), considering the maximum impedance.

- Consideration of Fault Types: We have considered various fault types, including three-phase, single-line-to-ground, and line-to-line faults, when calculating the maximum and minimum short circuit currents.

- Validation of Results: We have validated our calculations for maximum and minimum short circuit currents through comparison with actual system performance and testing

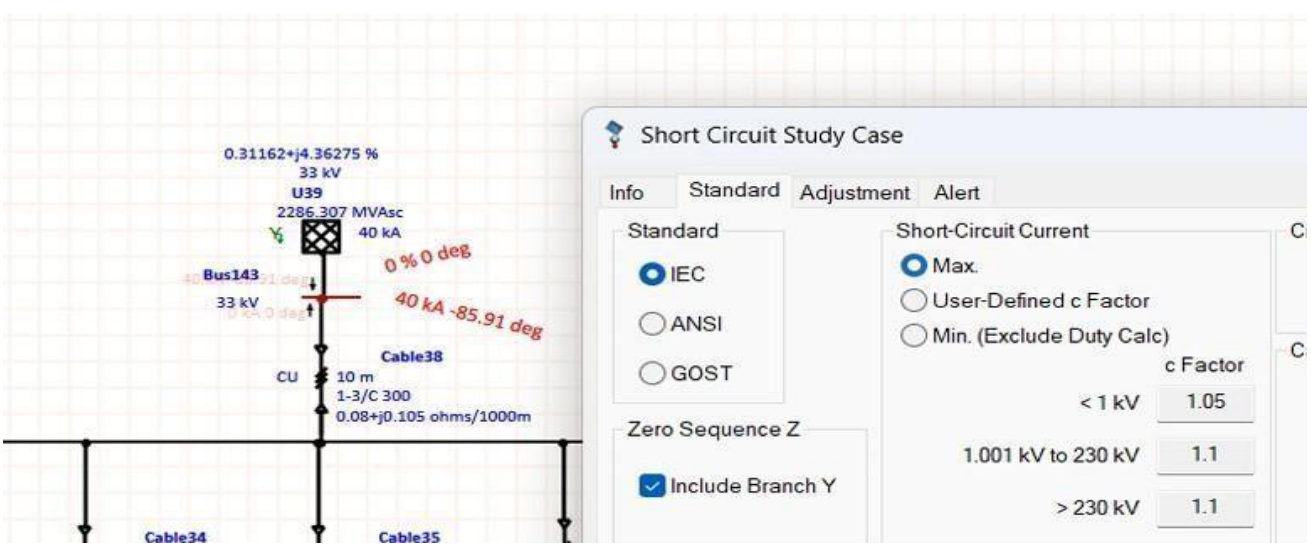

Day 13;

- Grounding Implementation: We have implemented grounding systems to intentionally connect our electrical circuits and systems to the earth.

- Earthing Installation: We have installed earthing systems, providing a physical connection between our systems and the earth.

- Safety Ensured: We have ensured the safety of people and equipment by providing a safe path for fault currents to flow to the earth.

- Grounding Types: We have implemented various types of grounding, including system grounding, equipment grounding, and protective grounding.

- Regular Maintenance: We have performed regular maintenance and testing of our grounding and earthing systems to ensure their integrity and effectiveness.

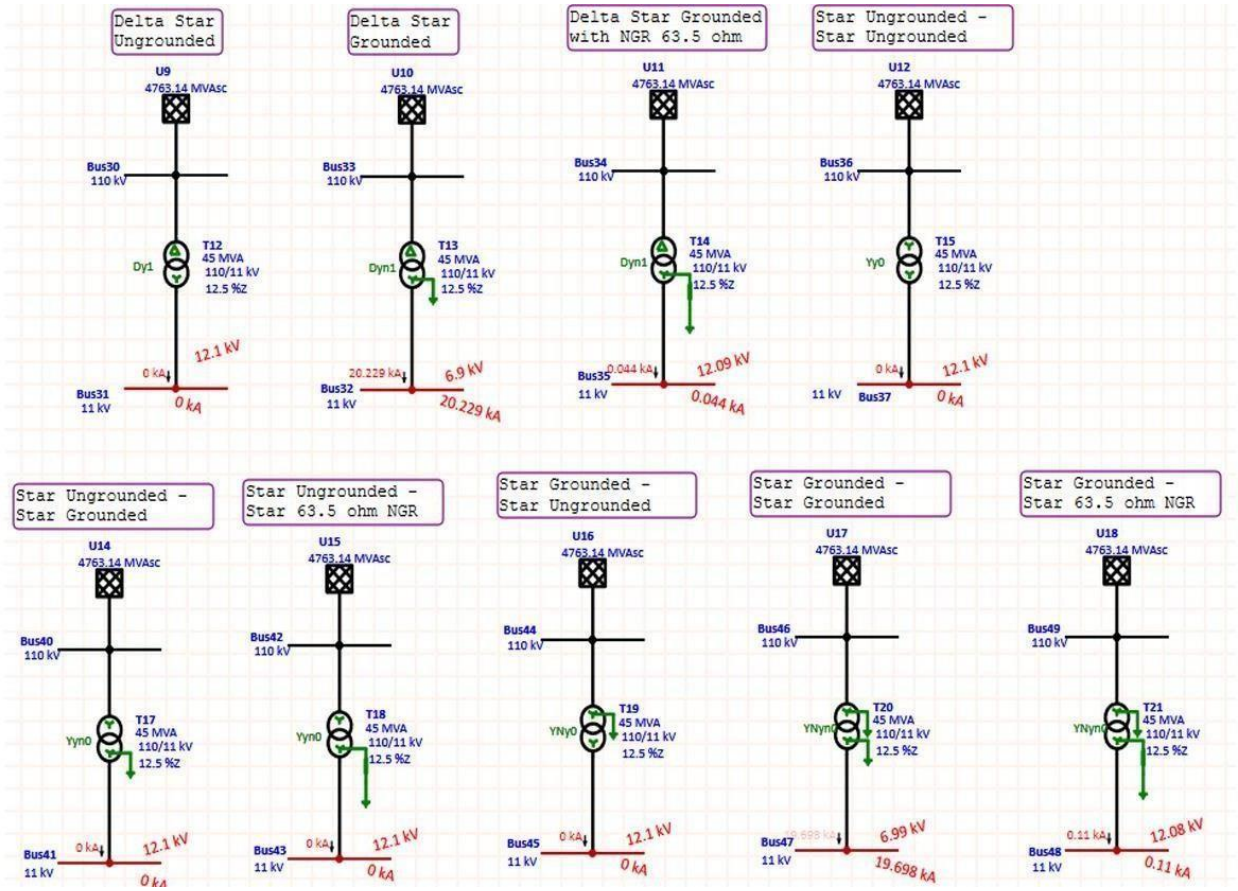

Day 14;

- Current Limiting Fuses: We have installed current limiting fuses to restrict fault current levels.

- Circuit Breakers: We have used circuit breakers with current limiting capabilities to control fault currents.

- Fault Current Limiters (FCLs):We have installed FCLs to limit fault current levels.

- High-Resistance Grounding (HRG): We have implemented HRG systems to limit fault current levels.

- Impedance Grounding: We have implemented impedance grounding to limit fault current levels.

- Low-Voltage Ride-Through (LVRT): We have implemented LVRT systems to control fault currents during voltage dips.

Before CLR

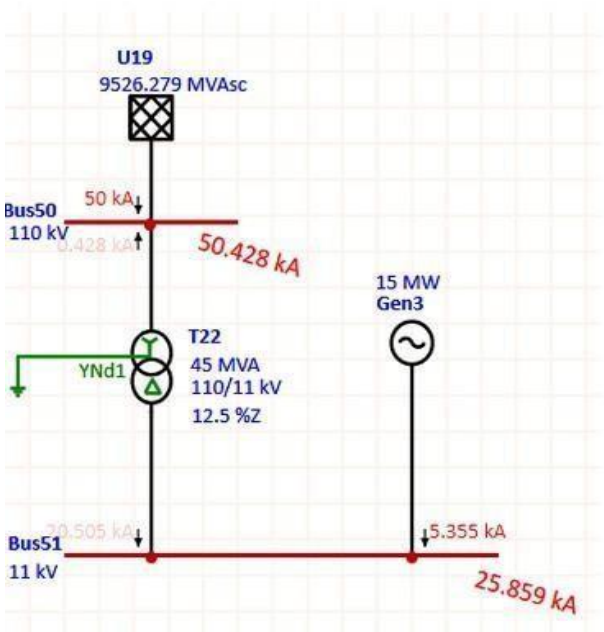

After CLR

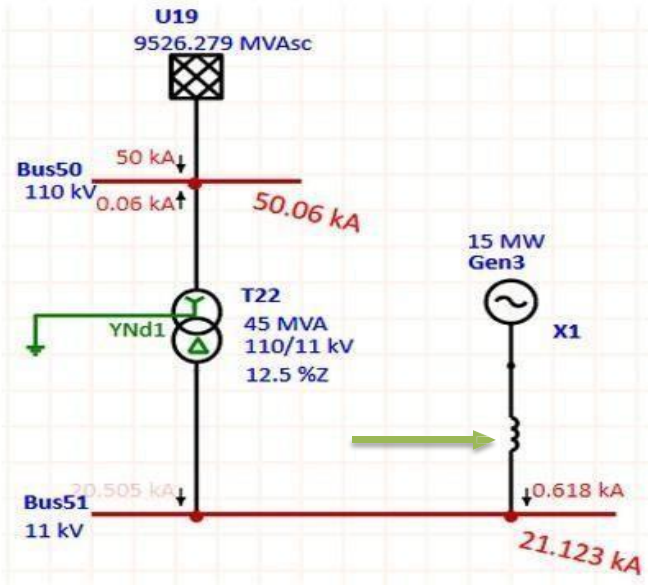

CHAPTER 4

CONCLUSION

In conclusion, my inaugural two weeks at Power Projects India have been a transformative journey, marked by a profound exploration of the fundamental principles underlying power system analysis. The comprehensive training programs in Load Flow Analysis and Short Circuit Analysis have empowered me with a robust foundation, enabling me to decipher the intricacies of power system behavior under diverse operational conditions.

Through an amalgamation of theoretical insights and practical applications, I have developed a nuanced understanding of the critical aspects of power system design, operation, and maintenance. The expertise garnered in Load Flow Analysis has allowed me to grasp the complexities of power flow, voltage regulation, and reactive power management, thereby enabling me to optimize power system performance and ensure reliable operation.

Furthermore, the knowledge acquired in Short Circuit Analysis has equipped me with the skills to identify and mitigate potential faults, ensuring the safety and reliability of power systems. By mastering the concepts of fault current analysis, grounding, and earthing, I am now adept at designing and developing power systems that are resilient to faults and capable of withstanding the rigors of operational demands.

As I progress in my tenure at Power Projects India, I am confident that the foundational knowledge acquired in these initial two weeks will serve as a launching pad for further exploration and mastery of advanced power system analysis techniques. With a steadfast commitment to excellence and a passion for innovation, I am poised to make meaningful contributions to the realm of power system engineering, driving the development of efficient, reliable, and sustainable power systems that cater to the ever-evolving needs of our global community.